STANDARD

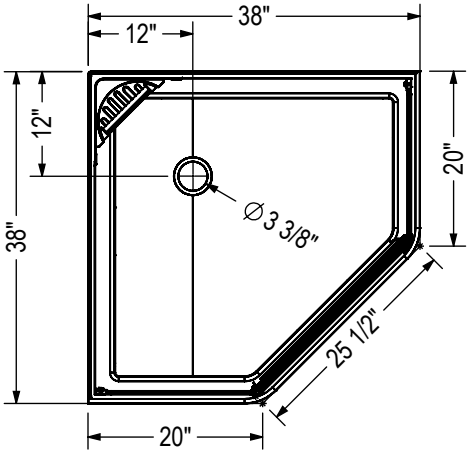

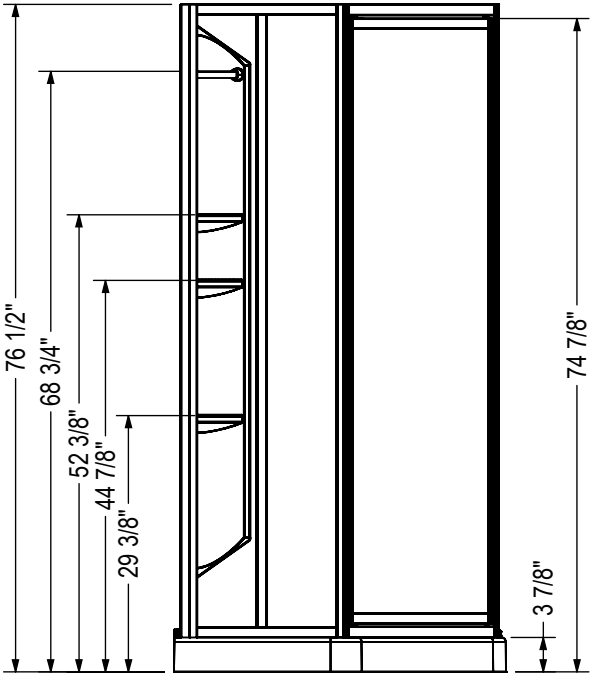

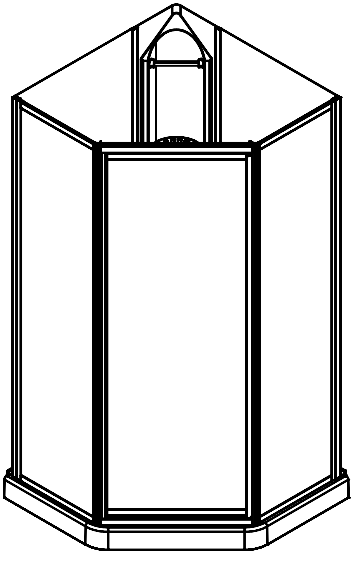

- Pivot door with left or right opening
- Door wall jamb adjustment : 1/2"

Code	Description	Door opening
300015	Summit Shower Kit 38"-38" x 76 1/2"	21 1/2"

All dimensions are approximate. Structure measurements must be verified against the unit to ensure proper fit.